PRODUCT:	Subway 27" 3-LightVanity Light	PROJECT:	VAN-SUB	DATE:	2022

DESCRIPTION

FEATURES

IP RATING:	NA (DAMP LOCATION)
WEATHER RESISTANT POWDER COATING:	NA
DAYLIGHT SENSOR:	NA
FINISHES:	BRUSHED NICKEL
DIMMABLE:	YES
5-YEAR WARRANTY:	YES
LIGHT SOURCE:	INTEGRATED LED

SPECIFICATIONS

COLOR TEMPERATURE (K):	3000k
WATTAGE (W):	29
VOLTAGE (V):	120
CRI:	80+
DIMMING:	ELV-TRIAC (100-20%)
FINISHES:	BRUSHED NICKEL
PRODUCT DIMENSION:	D: [redacted] L: 27.17' W: 3.39" H: 5.2"
RATED LIFE (Y):	30,000 HOURS
CONSTRUCTION:	STEEL, FROSTED GLASS
MOUNTING:	HARDWIRED KIT INCLUD

CERTIFICATIONS

TECHNICAL DRAWING

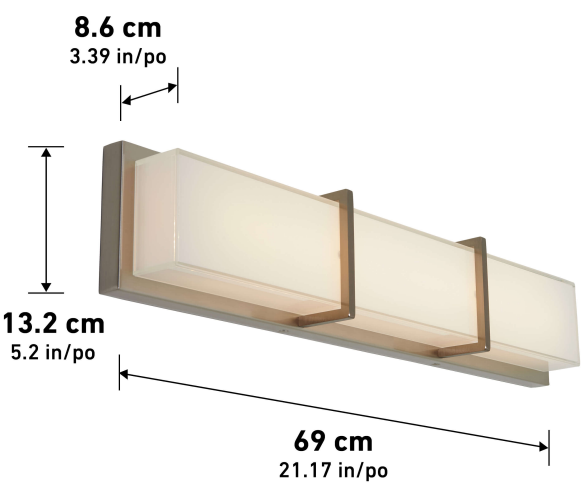

Model & Size	CRI	Kelvins	Watts	LED Lumens	Delivered
VAN-SUB	80+	3000k	29		1900LM

NOTES:

ETL certified,

STAMP

Artika reserves the right to modify its products from time to time as part of our continuous improvement program.

Service & products for professionals.
Service & produits pour professionnels.
Servicio & productos para profesionales.

+1-866-661-9606 ***opt. 2***
pro@artika.com
www.artika.com/pro

artika pro
1756 50th ave, Lachine, QC H8T 2V5, Canada