PRODUCT:	Alpha Track 3LT White Pro	PART#	TRK3-AL-WH10TE10-J	DATE:	2023

DESCRIPTION

FEATURES

LOCATION:	DAMP
WEATHER RESISTANT POWDER	N/A
COATING: DAYLIGHT SENSOR:	N/A
FINISHES:	White
DIMMABLE:	Yes (100%-10%
5-YEAR WARRANTY:	Yes
LIGHT SOURCE:	LED

SPECIFICATIONS

COLOR TEMPERATURE (K):	3000K
WATTAGE (W):	13W
VOLTAGE (V):	120V
CRI:	90+
DIMMING:	ELV/TRIAC (100-10)
FINISHES:	Black, White
PRODUCT DIMENSION: D: [redacted]	L: 31.5" W: 6.89" H: 7.09"
RATED LIFE (Y):	50,000
CONSTRUCTION:	Steel
MOUNTING:	Ceiling mount

CERTIFICATIONS

TECHNICAL DRAWING

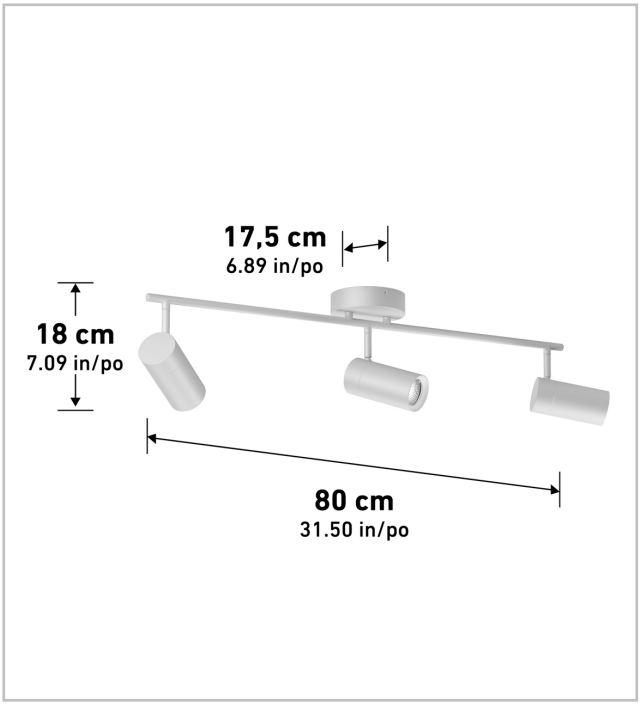

Model & Size	CRI	Kelvins	Watts	LED Lumens	Delivered
3 Head	90+	3000	13		950lm

NOTES:

JA8 (Title 24) Compliant, ETL Certified, Mid-Beam

STAMP

California Energy Commission JA8 T24 COMPLIANT

Artika reserves the right to modify its products from time to time as part of our continuous improvement program.

Service & products for professionals.
Service & produits pour professionnels.
Servicio & productos para profesionales.

+1-866-661-9606 ***opt. 2***
pro@artika.com
www.artika.com/pro

artika pro
1756 50th ave, Lachine, QC H8T 2V5, Canada