PRODUCT:	OUT-WTC-SS WALTON SS SCONCE	PROJECT:	ARTIKA	DATE:	1/2022

DESCRIPTION

FEATURES

IP RATING:	N/A (Wet location)
WEATHER RESISTANT POWDER COATING:	YES
DAYLIGHT SENSOR:	NO
FINISHES:	Stainless (Or Black)
DIMMABLE:	No
5-YEAR WARRANTY:	Yes
LIGHT SOURCE:	INTEGRATED LED

SPECIFICATIONS

COLOR TEMPERATURE (K):	3000-4000-5000K Switch
WATTAGE (W):	20W
VOLTAGE (V):	120V
CRI:	90+
DIMMING:	ELV TRIAC (100-20%)
FINISHES:	Stainless (Or Black)
PRODUCT DIMENSION:	D: [redacted] L: 4.72" W: 5.63" H: 5.98"
RATED LIFE (Y):	50,000 Hours
CONSTRUCTION:	Steel, Corrosion resistant
MOUNTING:	Wall mount, Hardwired

CERTIFICATIONS

TECHNICAL DRAWING

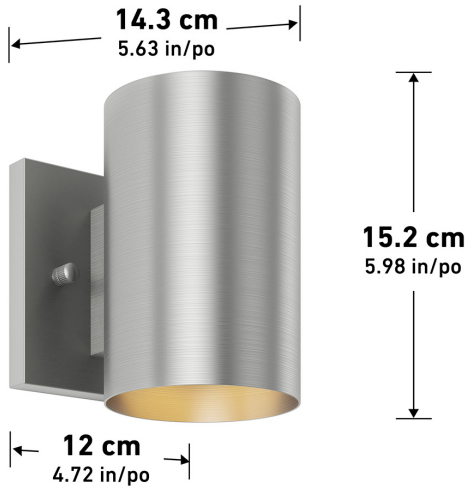

Model & Size	CRI	Kelvins	Watts	LED Lumens	Delivered
OUT-WTC-MB	90+	3-4-5K	20	N/A	600

NOTES:

JA8 (Title 24) Compliant, ETL certified

STAMP

California Energy Commission JA8 T24 COMPLIANT

Artika reserves the right to modify its products from time to time as part of our continuous improvement program.

Service & products for professionals.
Service & produits pour professionnels.
Servicio & productos para profesionales.

+1-866-661-9606 ***opt. 2***
pro@artika.com
www.artika.com/pro

artika pro
1756 50th ave, Lachine, QC H8T 2V5, Canada